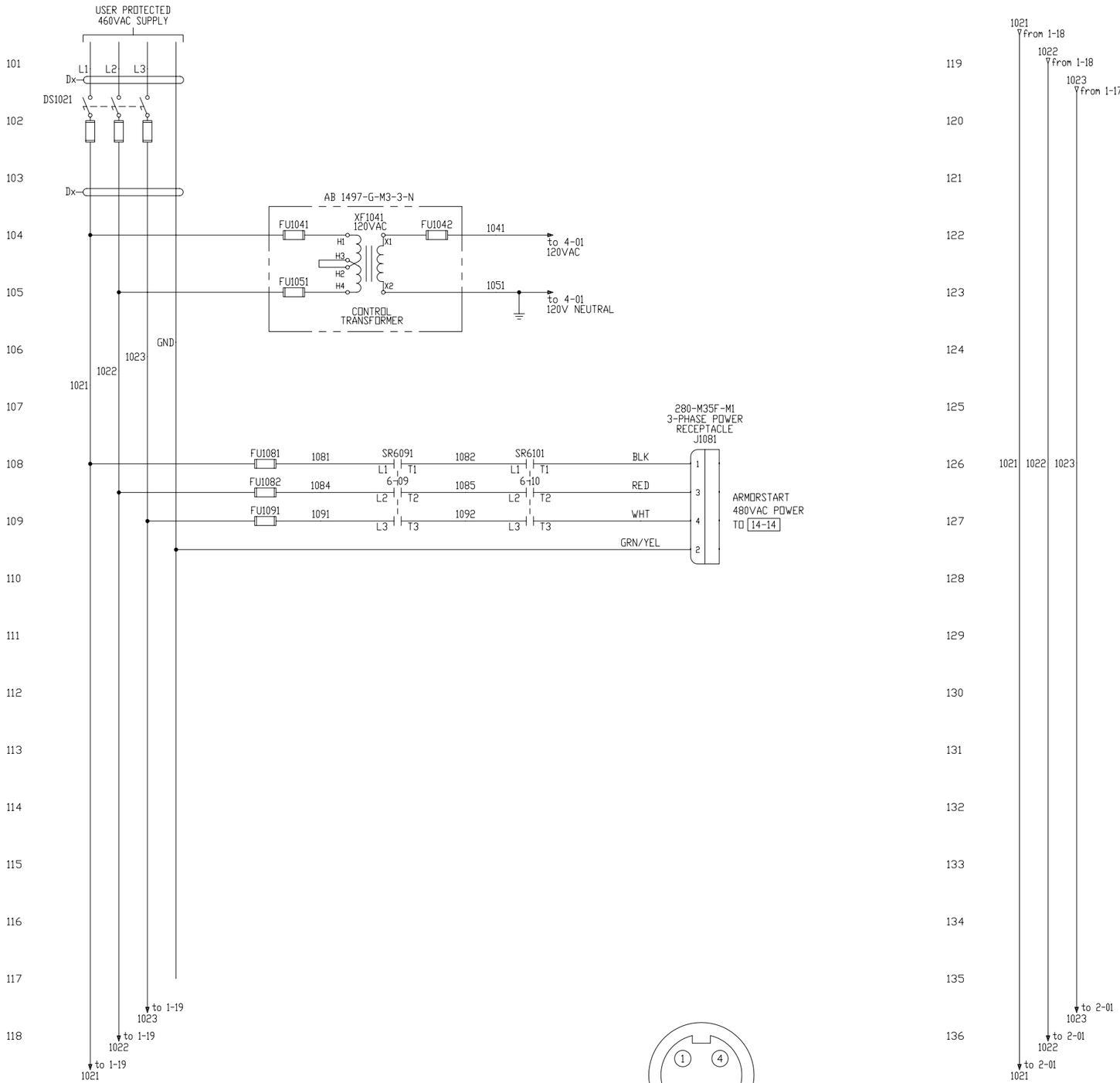

NOTES:
1. ALL WIRES TO BE xxxV, xx*, xxx.
2. OBSERVE DIRTY/CLEAN WIRING PRACTICES.
3. Dx/Cx MARKERS INDICATE WIRE WAY ROUTING FOR THE SELECTED WIRES (Dx = DIRTY, Cx = CLEAN)
4. ALL WIRES ARE #xx AWG, UNLESS OTHERWISE NOTED.
5. ALL WIRES ARE xxx, UNLESS OTHERWISE NOTED.
6. ALL GROUND WIRES ARE #xx AWG xxxxxx, UNLESS OTHERWISE NOTED.

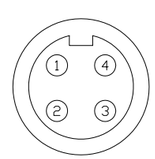

J1081-REF
3-PHASE POWER RECEPTACLE
(FEMALE FACE VIEW)

XXXX XXXXXXX XX XXX XXXXXXXXX XX XXXXXXXX XXXXXXXXX XX XXX XXXXXXXXXXXX XXXXXXXXX XXXXX XX XXXXXXXXXXX XXX XXX XXXXXX XXXXXX XX XXXXXXXXX	***XXXXXX_XXXX*** ***XXXXXX***	ARMORSTART (ON MACHINE) ACCELERATOR TOOLKIT 480V POWER DISTRIBUTION	DWN DRN · DATE 08-04-09
		CUST COMPANY_NAME	DWG NO EXAMPLE · DWG REV A
			SHEET 01 OF 19

CAD PART 01_OMAT_POWER_DISTRIBUTION.DWG

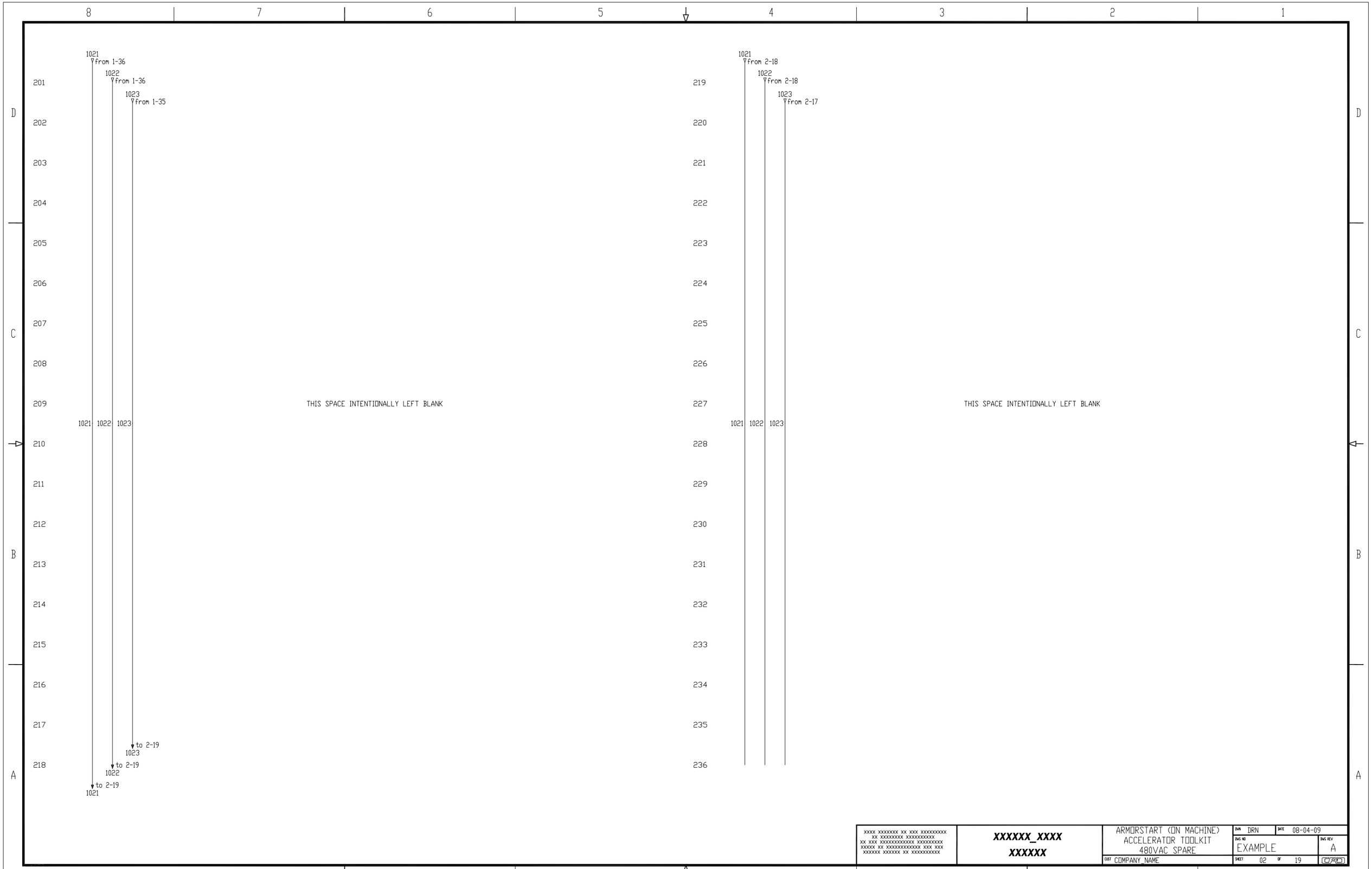
1021
from 1-36
1022
from 1-36
1023
from 1-35
201
202
203
204
205
206
207
208
209
THIS SPACE INTENTIONALLY LEFT BLANK
1021 1022 1023
210
211
212
213
214
215
216
217
to 2-19
1023
218
to 2-19
1022
to 2-19
1021
1021
from 2-18
1022
from 2-18
1023
from 2-17
219
220
221
222
223
224
225
226
227
THIS SPACE INTENTIONALLY LEFT BLANK
1021 1022 1023
228
229
230
231
232
233
234
235
236
XXXXXX_XXXX
XXXXXX
ARMORSTART (ON MACHINE)
ACCELERATOR TOOLKIT
480VAC SPARE
COMPANY_NAME
DRN
DATE 08-04-09
DWG NO EXAMPLE
DWG REV A
SHEET 02 OF 19
CAD PART 02_OMAT_POWER_DISTRIBUTION.DWG

THIS SPACE INTENTIONALLY LEFT BLANK

THIS SPACE INTENTIONALLY LEFT BLANK

XXXX XXXXXXX XX XXX XXXXXXXXX XX XXXXXXXX XXXXXXXXX XX XXX XXXXXXXXXXXX XXXXXXXXX XXXXX XX XXXXXXXXXXXX XXX XXX XXXXXX XXXXXX XX XXXXXXXXX	***XXXXXX_XXXX XXXXXX***	ARMORSTART (ON MACHINE) ACCELERATOR TOOLKIT SPARE	DWN DRN	DATE 08-04-09
			DWG NO EXAMPLE	DWG REV A
		CUST COMPANY_NAME	SHEET 03 OF 19	CAD

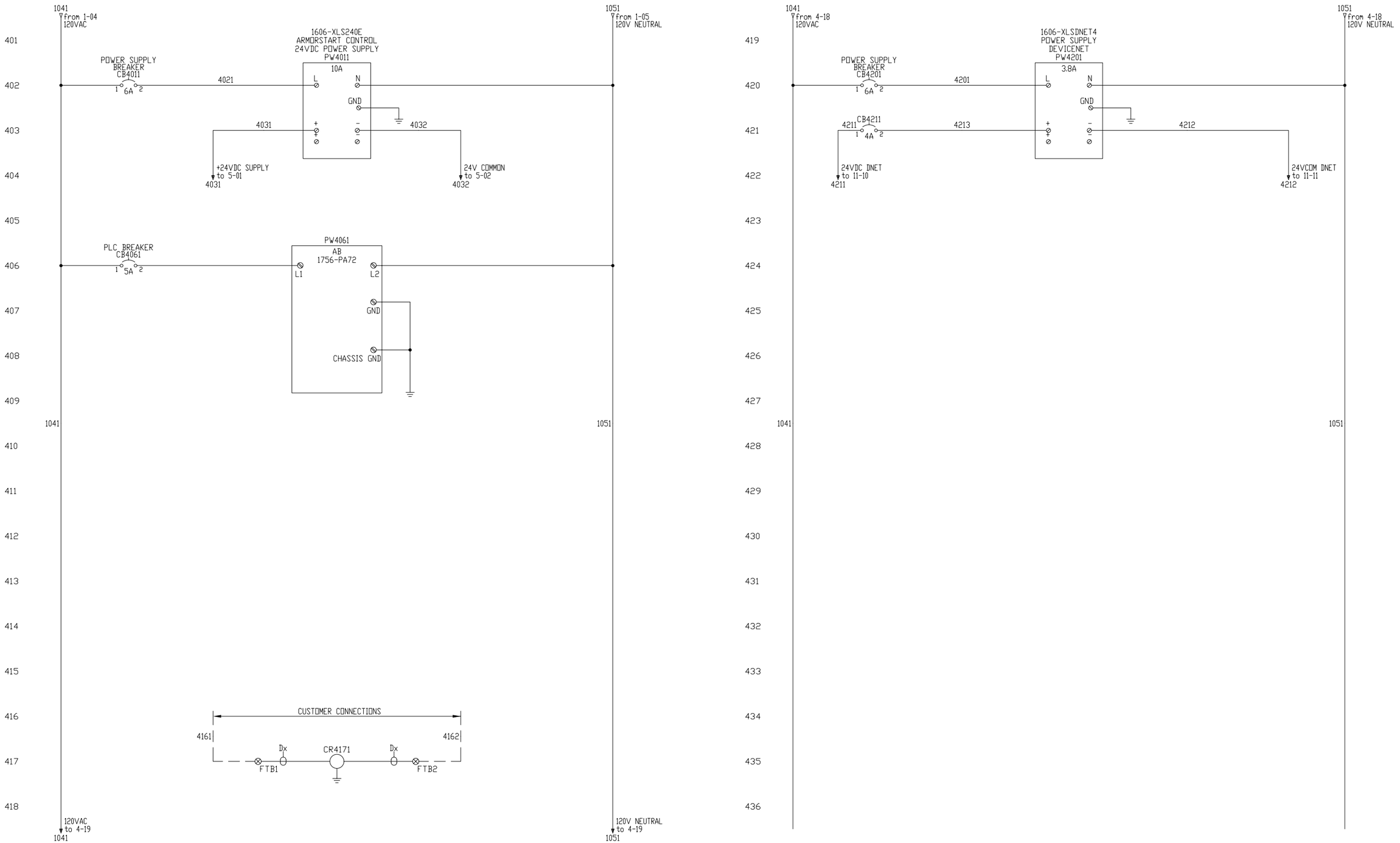

NOTES:
1. ALL WIRES TO BE xxxV, xx*, xxx.
2. OBSERVE DIRTY/CLEAN WIRING PRACTICES.
3. Dx/Cx MARKERS INDICATE WIRE WAY ROUTING FOR THE SELECTED WIRES (Dx = DIRTY, Cx = CLEAN)
4. ALL WIRES ARE #xx AWG, UNLESS OTHERWISE NOTED.
5. ALL WIRES ARE xxx, UNLESS OTHERWISE NOTED.
6. ALL GROUND WIRES ARE #xx AWG xxxxxx, UNLESS OTHERWISE NOTED.

XXXX XXXXXXX XX XXX XXXXXXXXX XX XXXXXXXX XXXXXXXXX XX XXX XXXXXXXXXXXX XXXXXXXXX XXXXX XX XXXXXXXXXXXX XXX XXX XXXXXX XXXXXX XX XXXXXXXXX	***XXXXXX_XXXX*** ***XXXXXX***	ARMORSTART (ON MACHINE) ACCELERATOR TOOLKIT 120VAC AUXILIARY	DWN DRN	DATE 08-04-09
			DWG NO EXAMPLE	DWG REV A
		CUST COMPANY_NAME	SHEET 04 OF 19	CAD

CAD PART 04_OMAT_120V_CONTROL.DWG

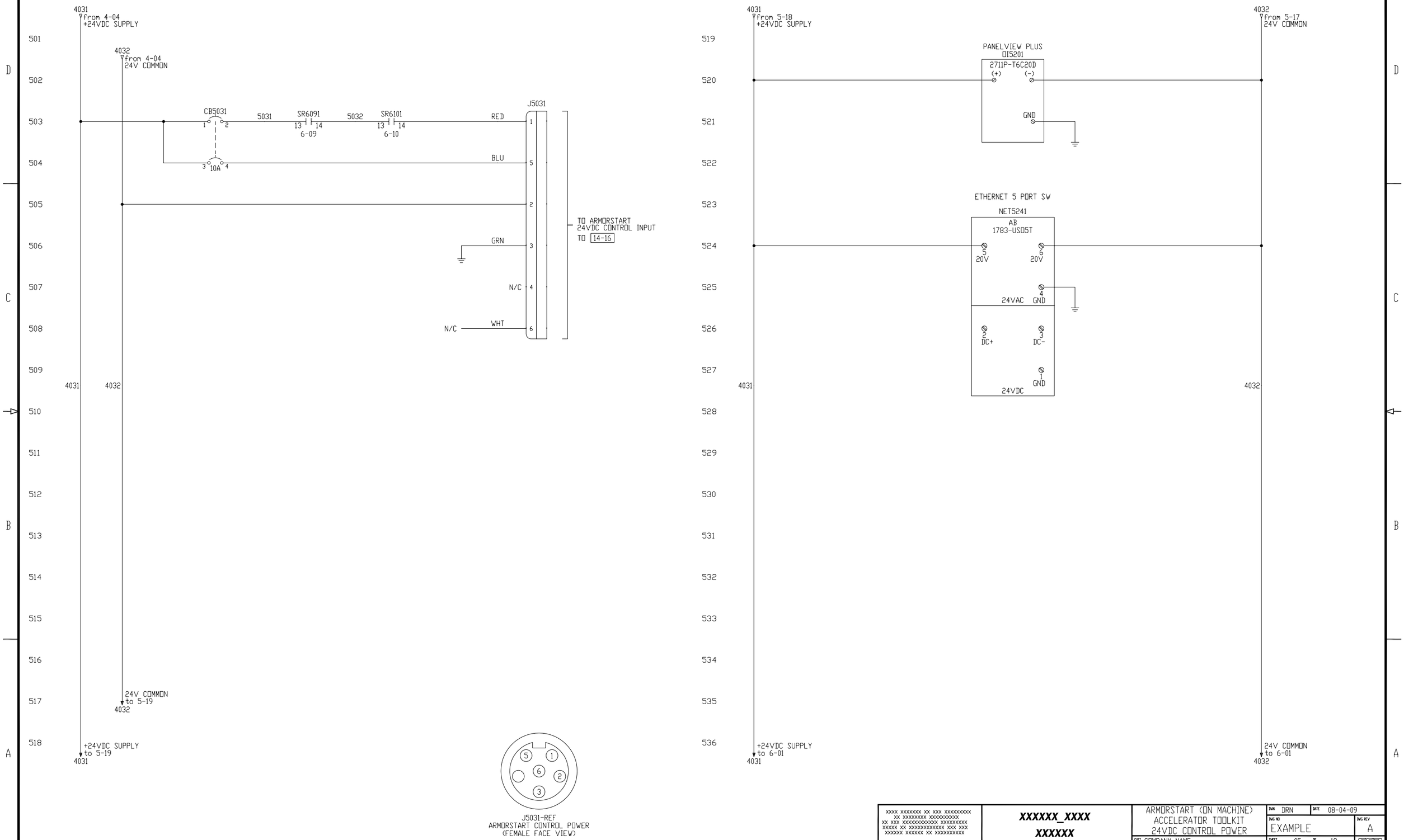

XXXX XXXXXXX XX XXX XXXXXXXXX
XX XXXXXXXX XXXXXXXXX
XX XXX XXXXXXXXXXXX XXXXXXXXX
XXXXX XX XXXXXXXXXXXX XXX XXX
XXXXXX XXXXXX XX XXXXXXXXX

XXXXXX_XXXX
XXXXXX

ARMORSTART (ON MACHINE)
ACCELERATOR TOOLKIT
24VDC CONTROL POWER

CUST COMPANY_NAME

DWN DRN | DATE 08-04-09
DWG NO EXAMPLE | DWG REV A
SHEET 05 OF 19

CAD PART 05_OMAT_24VDC_CONTROL.DWG

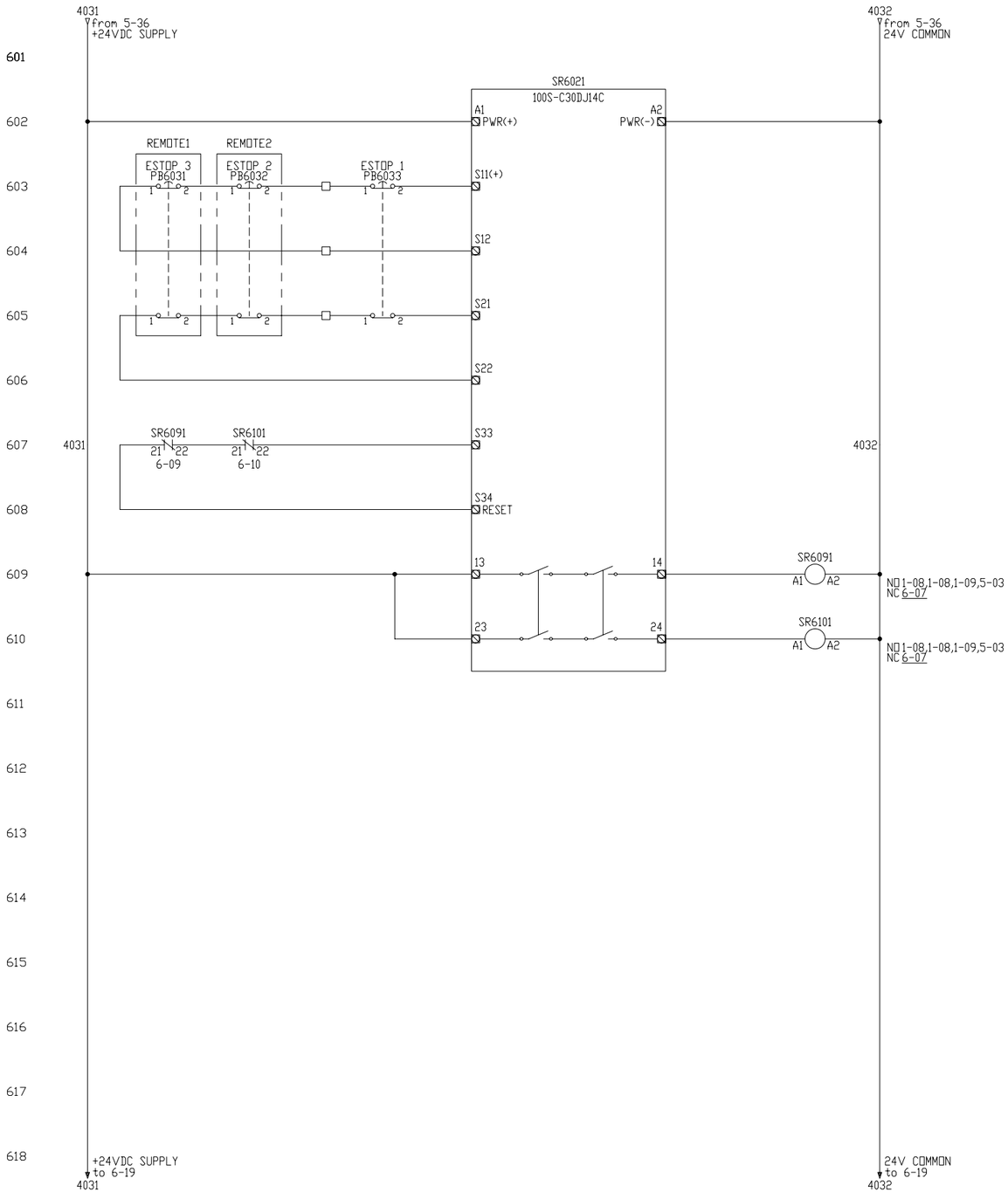

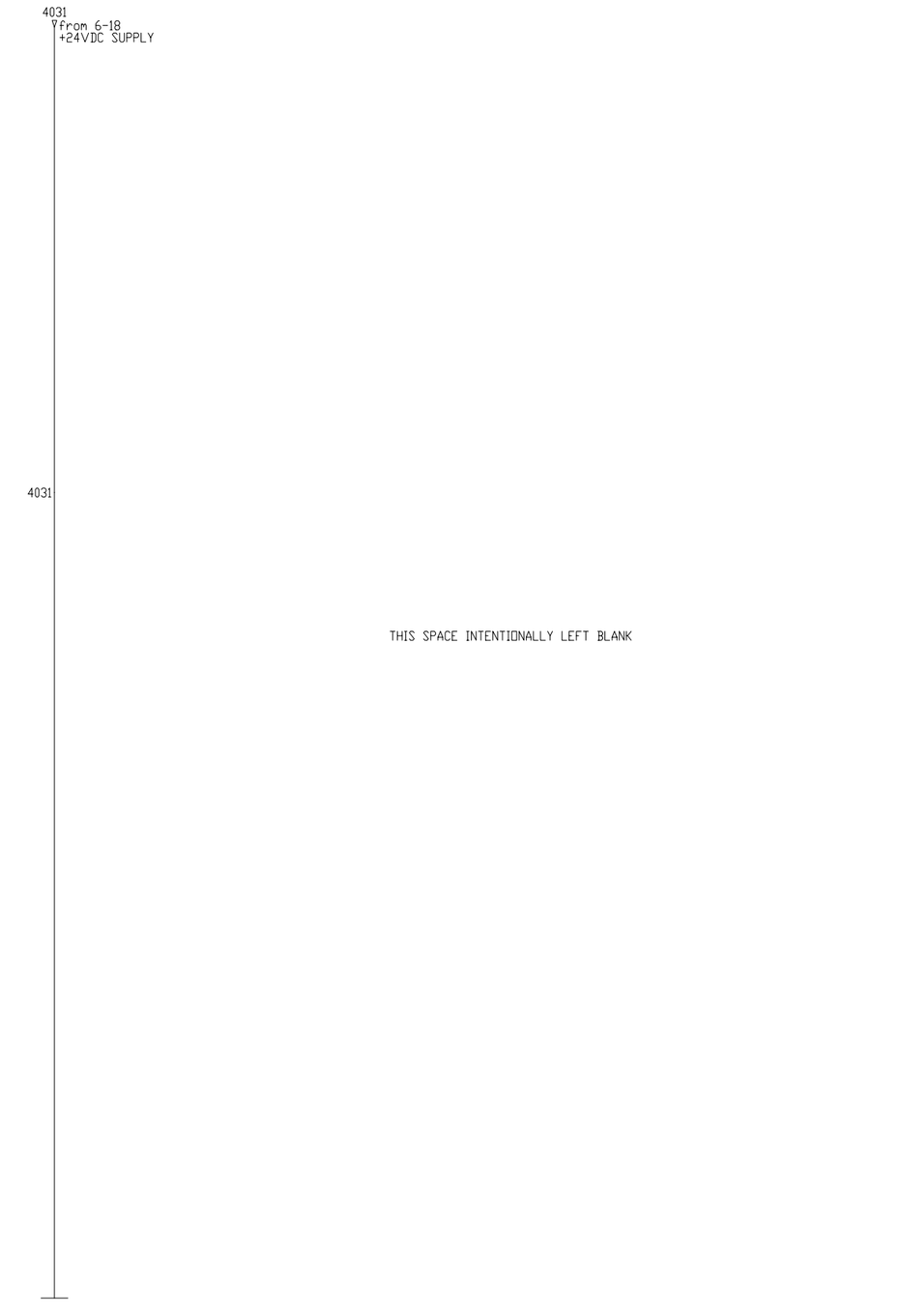

THIS SPACE INTENTIONALLY LEFT BLANK

XXXX XXXXXXX XX XXX XXXXXXXXX XX XXXXXXXX XXXXXXXXXX XX XXX XXXXXXXXXXXX XXXXXXXXX XXXXX XX XXXXXXXXXXXX XXX XXX XXXXXX XXXXXX XX XXXXXXXXXX	XXXXXX_XXXX XXXXXX	ARMORSTART (ON MACHINE) ACCELERATOR TOOLKIT +24VDC DNET SUPPLY	DWN DRN	DATE 08-04-09
			DWG NO EXAMPLE	DWG REV A
		CUST COMPANY NAME	SHEET 06 OF 19	

CAD PART 06_OMAT_SAFETY_RELAY.DWG

THIS SPACE INTENTIONALLY LEFT BLANK

THIS SPACE INTENTIONALLY LEFT BLANK

XXXX XXXXXXX XX XXX XXXXXXXXX XX XXXXXXXX XXXXXXXXX XX XXX XXXXXXXXXXXX XXXXXXXXX XXXXX XX XXXXXXXXXXXX XXX XXX XXXXXX XXXXXX XX XXXXXXXXX	***XXXXXX_XXXX*** ***XXXXXX***	ARMORSTART (ON MACHINE) ACCELERATOR TOOLKIT SPARE	DWN DRN	DATE 08-04-09
			DWG NO EXAMPLE	DWG REV A
		CUST COMPANY_NAME	SHEET 07 OF 19	CAD

801
802
803
804
805
806
807
808
809 THIS SPACE INTENTIONALLY LEFT BLANK
810
811
812
813
814
815
816
817
818

819
820
821
822
823
824
825
826
827 THIS SPACE INTENTIONALLY LEFT BLANK
828
829
830
831
832
833
834
835
836

XXXX XXXXXXX XX XXX XXXXXXXXX XX XXXXXXXX XXXXXXXXX XX XXX XXXXXXXXXXXX XXXXXXXXX XXXXX XX XXXXXXXXXXXX XXX XXX XXXXXX XXXXXX XX XXXXXXXXX	***XXXXXX_XXXX XXXXXX***	ARMORSTART (ON MACHINE) ACCELERATOR TOOLKIT SPARE	DWN DRN	DATE 08-04-09
			DWG NO EXAMPLE	DWG REV A
		CUST COMPANY_NAME	SHEET 08 OF 19	CAD

CAD PART 08_OMAT_CONTROL_SPARE.DWG

901
902
903
904
905
906
907
908
909 THIS SPACE INTENTIONALLY LEFT BLANK
910
911
912
913
914
915
916
917
918

919
920
921
922
923
924
925
926
927 THIS SPACE INTENTIONALLY LEFT BLANK
928
929
930
931
932
933
934
935
936

XXXX XXXXXXX XX XXX XXXXXXXXX XX XXXXXXXX XXXXXXXXX XX XXX XXXXXXXXXXXX XXXXXXXXX XXXXX XX XXXXXXXXXXXX XXX XXX XXXXXX XXXXXX XX XXXXXXXXX	***XXXXXX_XXXX*** ***XXXXXX***	ARMORSTART (ON MACHINE) ACCELERATOR TOOLKIT SPARE	DWN DRN	DATE 08-04-09
		CUST COMPANY_NAME	DWG NO EXAMPLE	DWG REV A
			SHEET 09 OF 19	CAD

CAD PART 09_OMAT_CONTROL_SPARE.DWG

THIS SPACE INTENTIONALLY LEFT BLANK

THIS SPACE INTENTIONALLY LEFT BLANK

XXXX XXXXXXX XX XXX XXXXXXXXX XX XXXXXXXX XXXXXXXXX XX XXX XXXXXXXXXXXX XXXXXXXXX XXXXX XX XXXXXXXXXXXX XXX XXX XXXXXX XXXXXX XX XXXXXXXXX	***XXXXXX_XXXX XXXXXX***	ARMORSTART (ON MACHINE) ACCELERATOR TOOLKIT SPARE	DWN DRN	DATE 08-04-09
			DWG NO EXAMPLE	DWG REV A
		CUST COMPANY_NAME	SHEET 10 OF 19	CAD

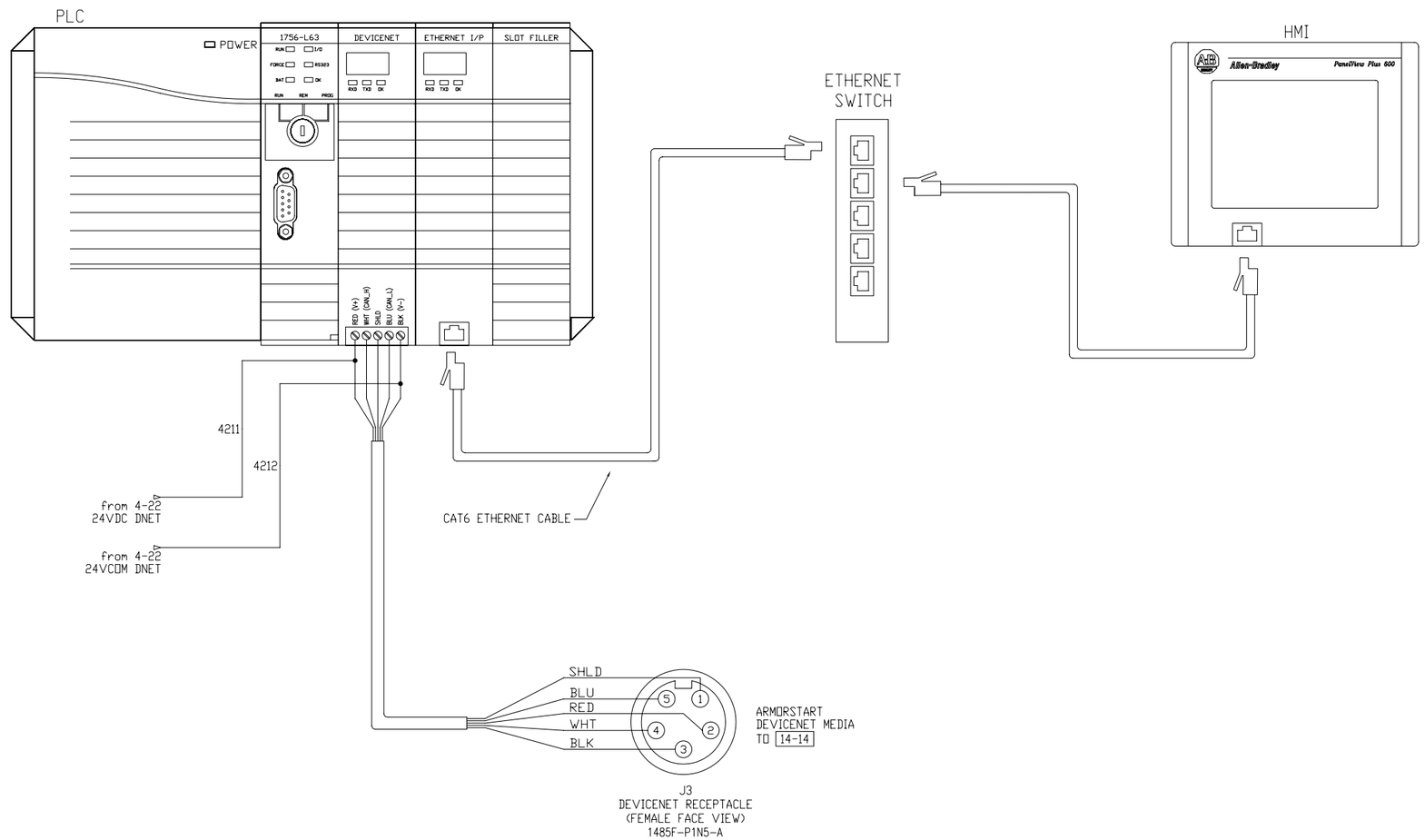

XXXX XXXXXXX XX XXX XXXXXXXXX XX XXXXXXX XXXXXXXXXX XX XXX XXXXXXXXXXX XXXXXXXXX XXXXX XX XXXXXXXXXXX XXX XXX XXXXXX XXXXXX XX XXXXXXXXXX	**XXXXXX_XXXX** **XXXXXX**	ARMORSTART (ON MACHINE) ACCELERATOR TOOLKIT COMUUNICATION / INTERCONNECT	DWN DRN DATE 06-11-09
		COMPANY NAME	DWG NO EXAMPLE DWG REV A
			SHEET 11 OF 19

CAD PART 11_OMAT_COMMUNICATIONS.DWG

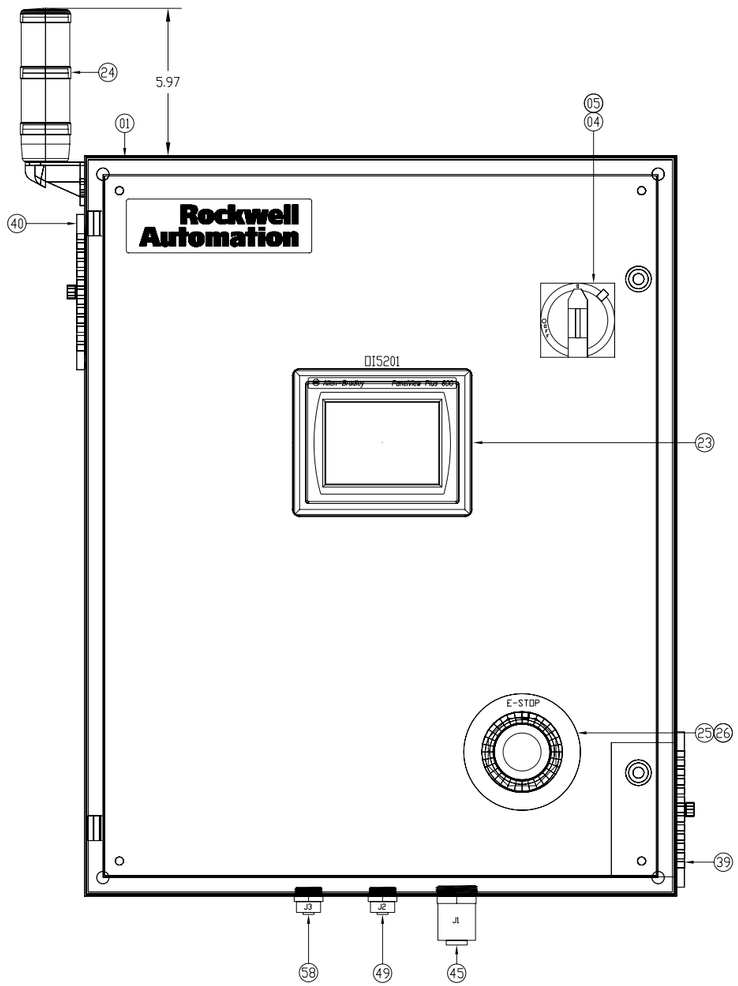

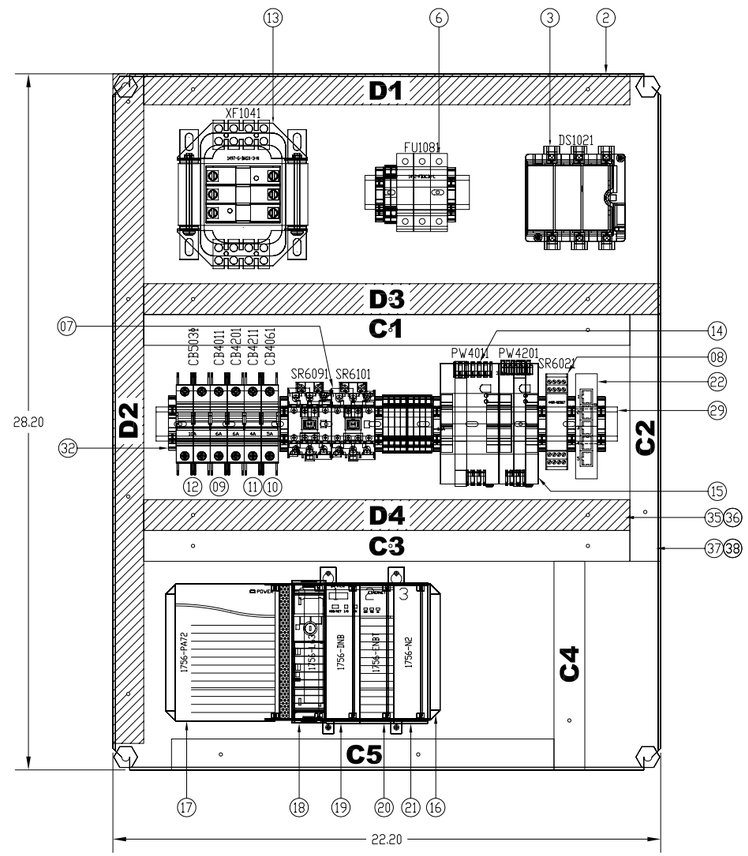

ITEM	QTY	DESCRIPTION	MFG	CATALOG
01	1	NEMA1 ENCLOSURE 30"x24"x10"	HOF	CSD302410
02	1	PANEL FOR ENCLOSURE 21"x22.5"	HOF	CP3024
03	1	FUSED DISCONNECT 30A CLASS J 3 POLE	AB	194R-J30-1753
04	1	DISCONNECT OPERATOR HANDLE TYPE 4/4X RED/YELLOW	AB	194R-HS4E
05	1	DISCONNECT OPERATING SHAFT HANDLE KIT	AB	194R-NHR1
06	1	FUSE HOLDER 3 POLE CLASS C LED BLOWN FUSE INDICATOR	AB	1492-FB3C30-L
07	2	SAFETY CONTACTOR 30A 24VDC COIL W/DIODE	AB	100S-C30DJ14C
08	1	MSR126T SAFETY RELAY	AB	440R-N23117
09	2	CIRCUIT BREAKER 6A 1 POLE	AB	1489-A1C060
10	1	CIRCUIT BREAKER 5A 1 POLE	AB	1489-A1C050
11	1	CIRCUIT BREAKER 4A 1 POLE	AB	1489-A1C040
12	1	CIRCUIT BREAKER 10A 2 POLE	AB	1489-A2C100
13	1	TRANSFORMER 500VA 240/480V PRIMARY 120V SECONDARY	AB	1497-G-BASX-3-N
14	1	POWER SUPPLY 24VDC 240W	AB	1606-XLS240E
15	1	POWER SUPPLY 24VDC 91W DEVICENET	AB	1606-XLSDNET4
16	1	CONTROLLOGIX 4 SLOT CHASSIS	AB	1756-A4
17	1	CONTROLLOGIX POWER SUPPLY 85-265VAC	AB	1756-PA72
18	1	CONTROLLOGIX L63 PROCESSOR	AB	1756-L63
19	1	CONTROLLOGIX DEVICENET BRIDGE/SCANNER MODULE	AB	1756-DNB
20	1	CONTROLLOGIX ETHERNET/IP BRIDGE MODULE	AB	1756-ENBT
21	1	CONTROLLOGIX SLOT FILLER	AB	1756-N2
22	1	STRATIX 2000 SWITCH UNMANAGED 5 PORTS	AB	1783-US05T
23	1	PANELVIEW PLUS 600 COLOR TOUCHSCREEN	AB	2711P-T6C20D
24	1	STACK LIGHT, VERTICAL MOUNT 1RED,1GREEN STEADY, 24VDC	AB	855EV-B24YL34
25	1	MUSHROOM HEAD OPERATOR TWIST TO RELEASE 30mm	AB	800FP-MT34
26	1	LEGEND PLATE 60mm ROUND YELLOW EMERGENCY STOP	AB	800F-15YSE112
27	1	PHOTO ELECTRIC SENSOR, RIGHTSIGHT, (PNP) 4PIN DC MICRO	AB	42EF-S1MPA-F4
28	1	RIGHT ANGLE BRACKET FOR PHOTO SENSOR	AB	60-2696
29	–	DIN RAIL 35mm x 7.5mm	AB	199-DR1
30	10	TERMINAL BLOCK FEED THRU GRAY	AB	1492-J3
31	4	TERMINAL BLOCK CENTER JUMPER 2 POLE	AB	1492-CJJ5-2
32	9	TERMINAL BLOCK END RETAINER	AB	1492-EAJ35
33	3	TERMINAL BLOCK END BARRIER	AB	1492-EBJ3
34	1	TERMINAL BLOCK SNAP-IN MARKER CARD	AB	1492-M5X15
35	–	PANDUIT WIRE DUCT, 1"x4" GRAY	PANDUIT	F1X4LG6
36	–	PANDUIT WIRE DUCT COVER, 1" GRAY	PANDUIT	C1LG6
37	–	PANDUIT WIRE DUCT, 1" x4" WHITE	PANDUIT	F1X4WH6
38	–	PANDUIT WIRE DUCT COVER, 1" WHITE	PANDUIT	C1WH6
39	1	FAN KIT 115V WITH FILTER	HOFFMAN	TFP41
40	1	EXHAUST GRILL WITH FILTER	HOFFMAN	TEP4
41	2	208 FULL VOLTAGE STARTER, DNET, RANGE 0.5-2.5A	AB	280D-F12Z-10B-CR-3
42	1	REVERSING STARTER, DNET, RANGE 0.5-2.5A	AB	281D-F12Z-10B-CR-3FR
43	1	ARMORSTART SOLID-STATE MOTOR CONTROL, DNET, 1.1-3.0A	AB	283D-FB3Z-10A-CR-3
44	2	ARMORSTART w/VARIABLE FREQ. AC DRIVES, DNET, 2.3A 1HP	AB	284D-FVD2P3Z-10-CR-3
45	1	M35, FEMALE 4-PIN RECEPTACLE	AB	280-M35F-M1
46	6	M35, 3-PHASE PWR. TEE REDUCING DROP(M22), 4-POLE	AB	280-RT35
47	6	ARMORCONNECT: PWR. MEDIA DROP CABLE STRAIGHT MALE 1m	AB	280-PWRM22G-M1
48	6	ARMORCONNECT: PWR. MEDIA TRUNK CABLE MALE/FEMALE 3m	AB	280-PWRM35A-M3
49	1	DC CONTROL POWER RECEPTACLE 6 PIN FEMALE	AB	888N-D65AF1-0M3
50	6	ARMORCONNECT: TRUNK/DROP CABLE STRAIGHT, FEMALE 3m	AB	889N-F65GFNM-3
51	6	ARMORCONNECT: TRUNK/DROP CABLE STRAIGHT, MALE 2m	AB	889N-M65GF-2
52	6	T:PORT ESTOP IN, RED OVERMOLD	AB	898N-653ES-NKF
53	1	SHORTIG PLUG: ESTOP IN, RED OVERMOLD	AB	889A-M65SP61
54	1	SEALING CAP, QUICK CHANGE CONNECTOR, INTERNAL THREADS	AB	888A-QCAP
55	12	CORDSET: DC MICRO(M12), FEMALE STRAIGHT 4PIN, MALE 90, 1m	AB	889D-F4ACDE-1
56	12	CORDSET: AC MICRO(DUAL KEY), MALE 90, 3PIN, 2m	AB	889R-E3AEA-2
57	6	TERMINAL CHAMBER, MINI, STRAIGHT FEMALE, 5PIN	AB	871A-TS5-N1
58	1	DEVICENET RECEPTACLE 5 PIN FEMALE	AB	1485F-P1N5-A
59	2	DEVICENET TERMINATOR, 1PORT STANDARD	AB	1485A-T1E4
60	7	DEVICENET CONNECTOR, CABLE DROP, 1PORT, 1m	AB	1485T-P1H4-B1
61	1	DEVICENET TRUNK CABLE, KWIKLINK HEAVY DUTY 8A, 75m	AB	1485C-P1E75
62	1	DEVICENET T-PORT, MINI TRUNK CONNECTION FEMALE MICRO	AB	1485P1R5-MN5
63	1	RSLOGIX 5000 STANDARD, ENG	AB	9324-RLD300ENE
64	1	RSLINX CLASSIC LITE, ENGLISH	AB	9355-WAB100ENE
65	1	RSNETWORX FOR DEVICENET	AB	9357-DNETL3
66	1	DEVICENET CONFIGURATION TERMINAL	AB	193-DNCT
67	1	DNCT COMMUNICATION CABLE w/MALE MICRO CONNECTOR 1m	AB	193-CM1

NOTES:
1. WIREWAYS MARKED Cx/Dx INDICATE CLEAN/DIRTY SIGNAL/POWER
2. FOR FURTHER INFORMATION ON SYSTEM DESIGN FOR CONTROL OF ELECTRICAL NOISE SEE ROCKWELL PUBLICATION #GMC RM001_-EN-P

XXXX XXXXXXX XX XXX XXXXXXXXX
XX XXXXXXXX XXXXXXXXXX
XX XXX XXXXXXXXXXX XXXXXXXXX
XXXXX XX XXXXXXXXXXXX XXX XXX
XXXXXX XXXXXX XX XXXXXXXXXX

XXXXXX_XXXX
XXXXXX

ARMORSTART (ON MACHINE)
ACCELERATOR TOOLKIT
CONCEPT AND BOM

CUST COMPANY_NAME

DWN DRN | DATE 06-11-09
DWG NO EXAMPLE | DWG REV A
SHEET 12 OF 19

CAD PART 12_DMAT_PANEL_LAYOUT.DWG

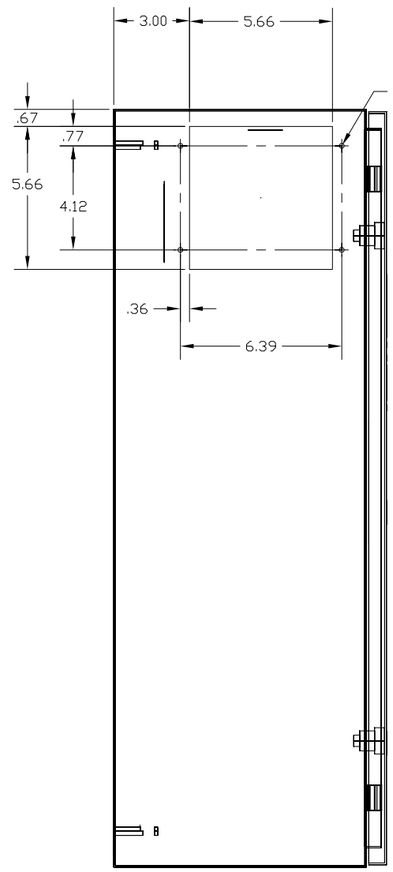

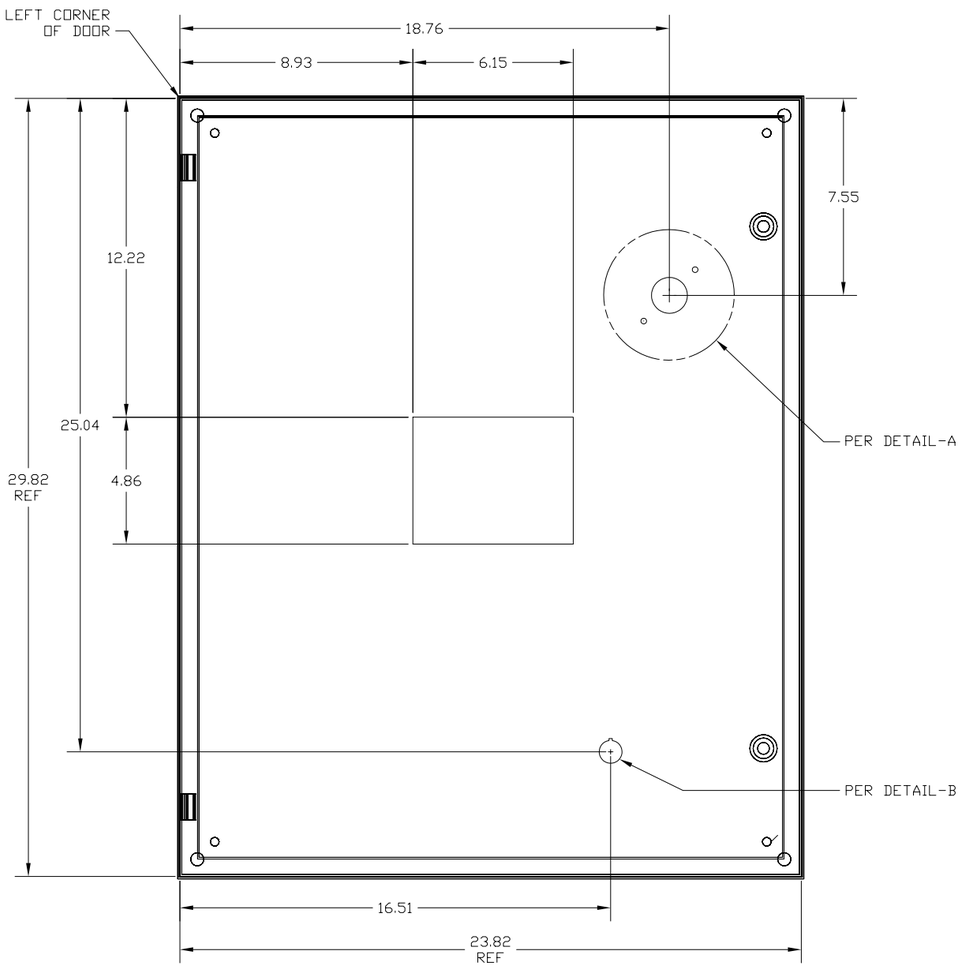

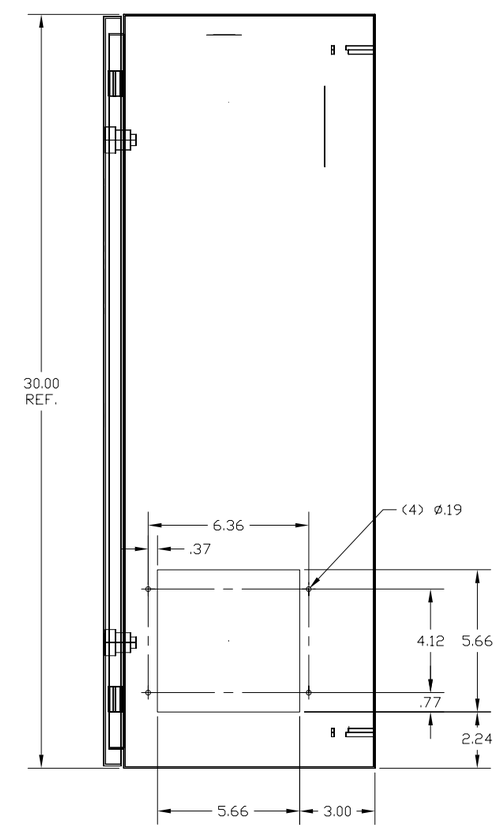

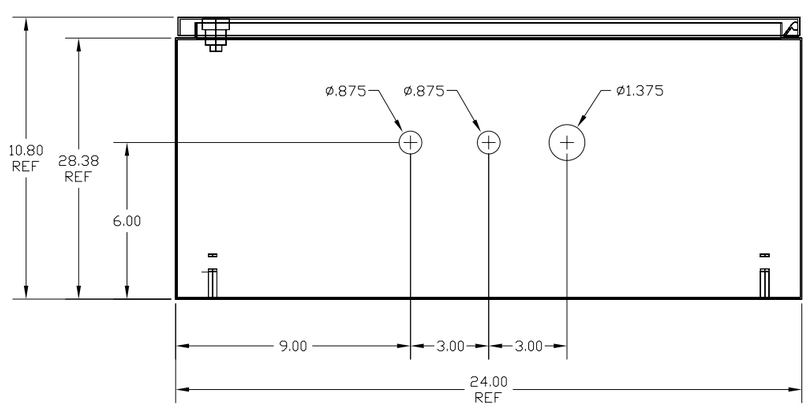

PANEL MODIFICATION

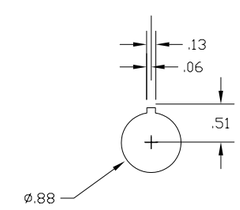

DETAIL-B

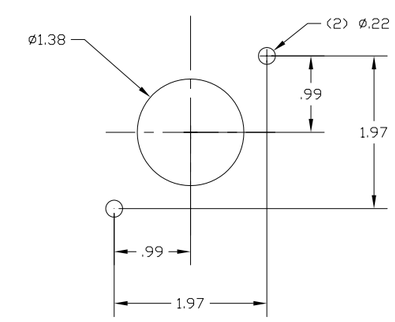

DETAIL-A

PART NO.	CHG. CHAR.	MATERIAL	SURFACE TREATMENT
-01	1	HOFFMAN PART CSD302410	ANSI 61 GRAY

XXXX XXXXXXX XX XXX XXXXXXXXX
XX XXXXXXX XXXXXXXXXX
XX XXX XXXXXXXXXXX XXXXXXXXX
XXXXX XX XXXXXXXXXXXX XXX XXX
XXXXXX XXXXXX XX XXXXXXXXXX

XXXXXX_XXXX
XXXXXX

ARMORSTART (ON MACHINE)
ACCELERATOR TOOLKIT
ENCLOSURE LAYOUT

CUST COMPANY NAME

DWN -- DATE 06-11-09
DWG NO EXAMPLE
DWG REV A
SHEET 13 OF 19

CAD PART 13_OMAT_ENCLOSURE_LAYOUT.DWG

LAYERING SELECT: ECHO

CONNECTION DIAGRAM

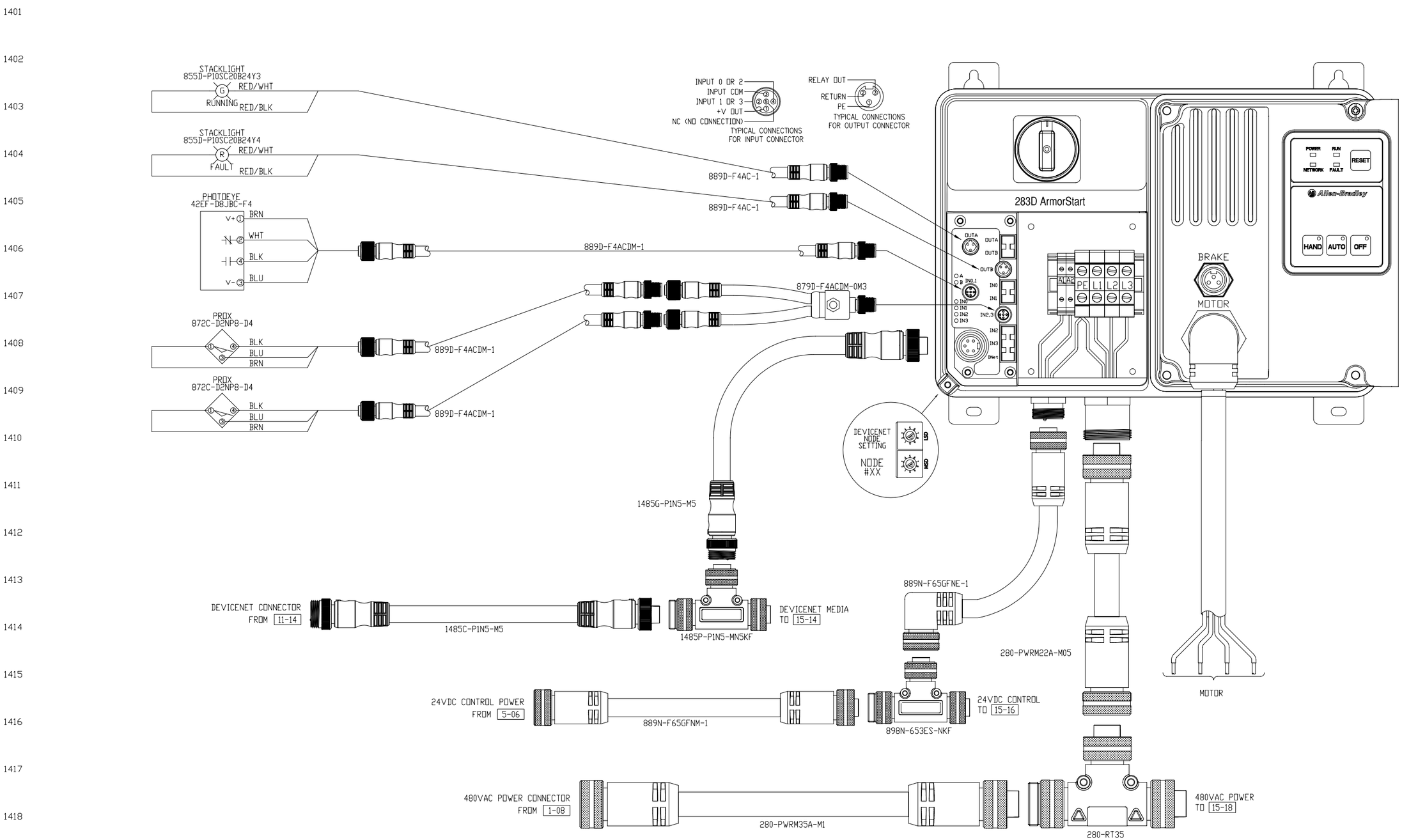

XXXX XXXXXXX XX XXX XXXXXXXXX XX XXXXXXXX XXXXXXXXXX XX XXX XXXXXXXXXXXX XXXXXXXXX XXXXX XX XXXXXXXXXXXX XXX XXX XXXXXX XXXXXX XX XXXXXXXXXX	**XXXXXX_XXXX XXXXXX**	ARMORSTART (ON MACHINE) ACCELERATOR TOOLKIT 283D CONNECTIONS (UNIT1)	DWN -- DATE 06-11-09
			DWG NO EXAMPLE DWG REV A
		CUST COMPANY NAME	SHEET 14 OF 19

CAD PART 14_DMAT_ARMORSTART_UNIT1.DWG

CONNECTION DIAGRAM

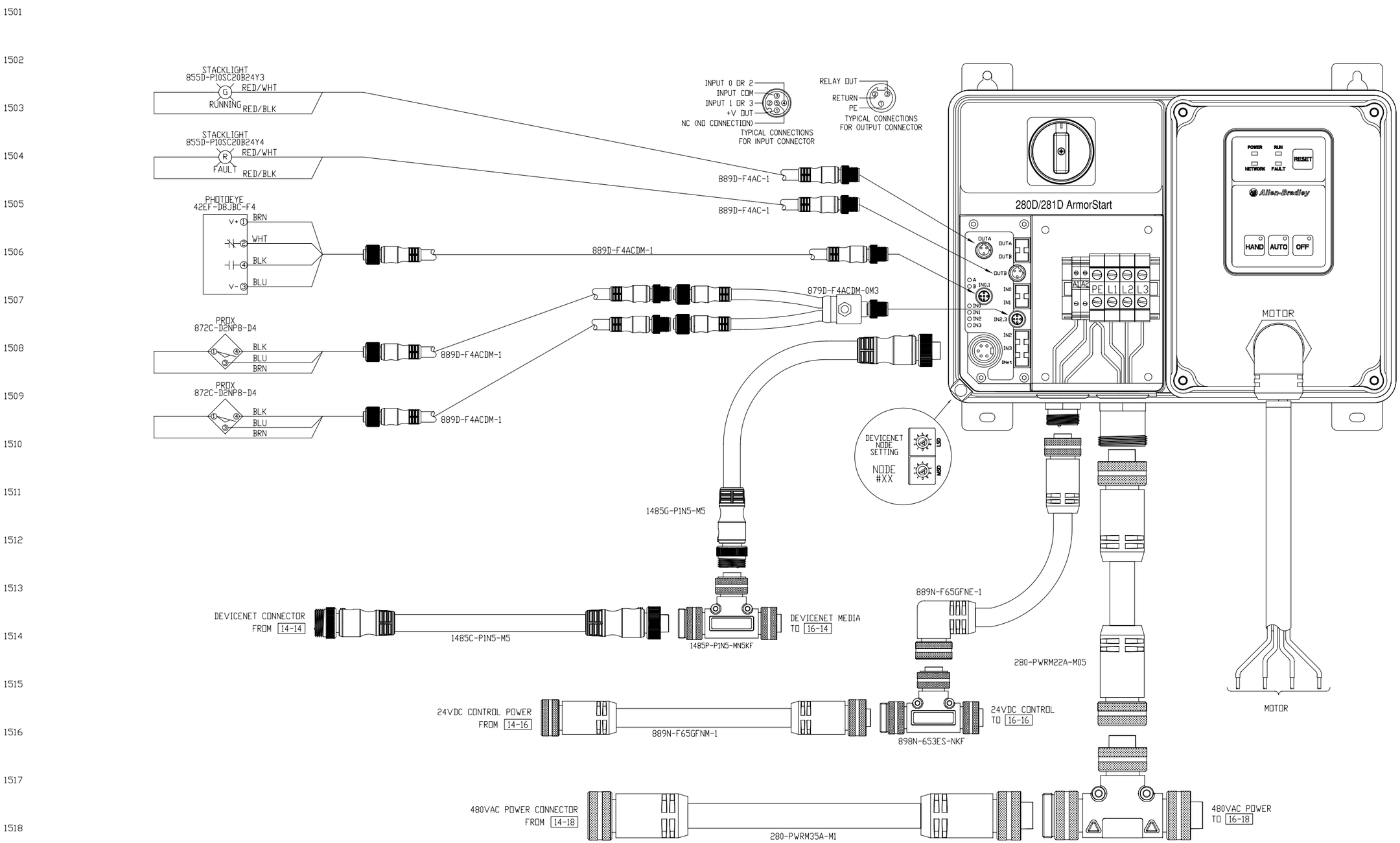

XXXX XXXXXXX XX XXX XXXXXXXXX XX XXXXXXXX XXXXXXXXXX XX XXX XXXXXXXXXXXX XXXXXXXXX XXXXX XX XXXXXXXXXXXX XXX XXX XXXXXX XXXXXX XX XXXXXXXXXX	***XXXXXX_XXXX*** ***XXXXXX***	ARMORSTART (ON MACHINE) ACCELERATOR TOOLKIT 280D CONNECTIONS (UNIT2)	DWN -- DATE 06-11-09 DWG NO EXAMPLE DWG REV A CUST COMPANY NAME SHEET 15 OF 19	

CAD PART 15_DMAT_ARMORSTART_UNIT2.DWG

CONNECTION DIAGRAM

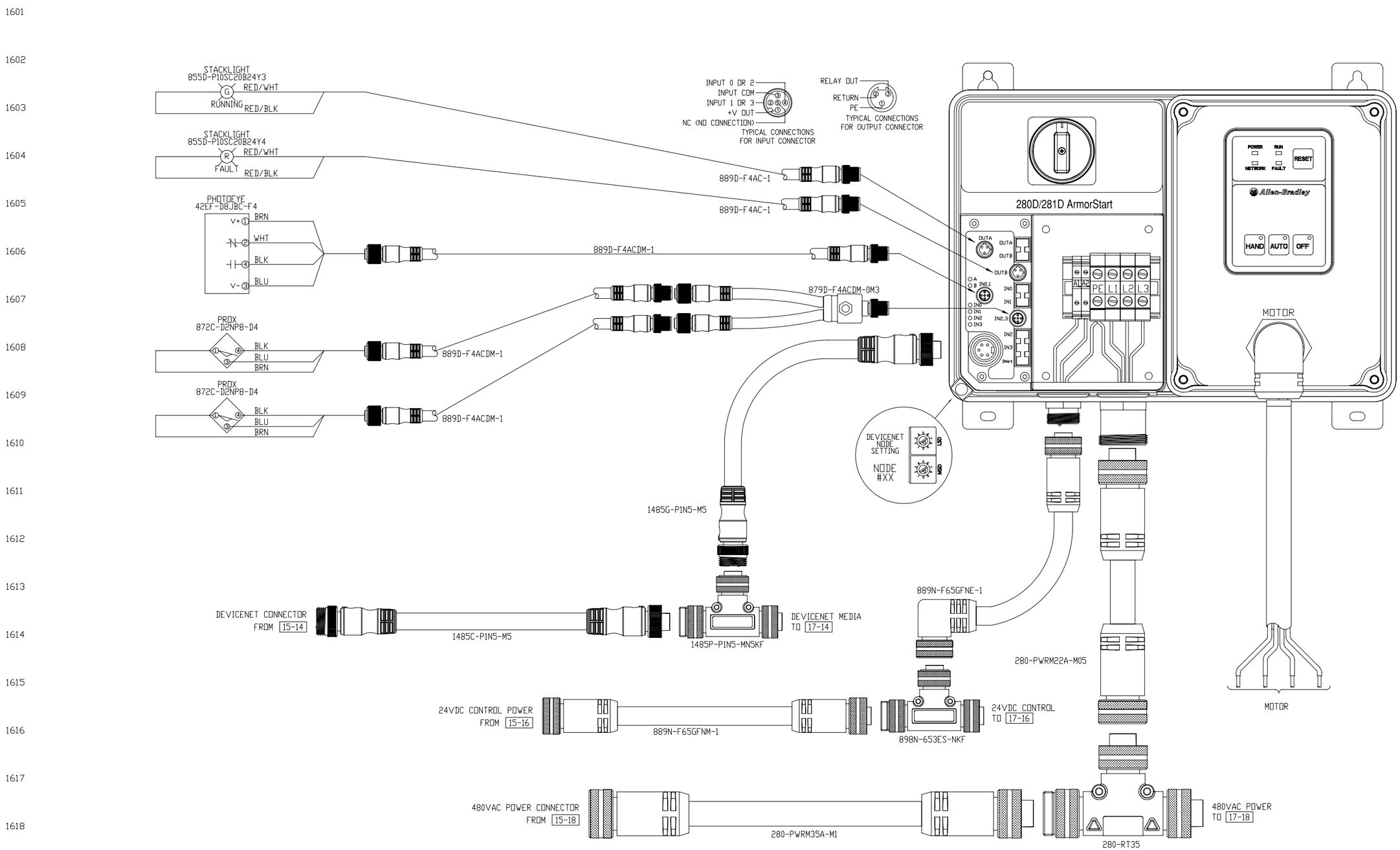

XXXX XXXXXXX XX XXX XXXXXXXXX XX XXXXXXXX XXXXXXXXXX XX XXX XXXXXXXXXXXX XXXXXXXXX XXXXX XX XXXXXXXXXXX XXX XXX XXXXXX XXXXXX XX XXXXXXXXXX	**XXXXXX_XXXX XXXXXX**	ARMORSTART (ON MACHINE) ACCELERATOR TOOLKIT 281D CONNECTIONS (UNIT3)	DWN -- DATE 06-11-09
		CUST COMPANY NAME	DWG NO EXAMPLE DWG REV A
			SHEET 16 OF 19

CAD PART 16_OMAT_ARMORSTART_UNIT3.DWG

CONNECTION DIAGRAM

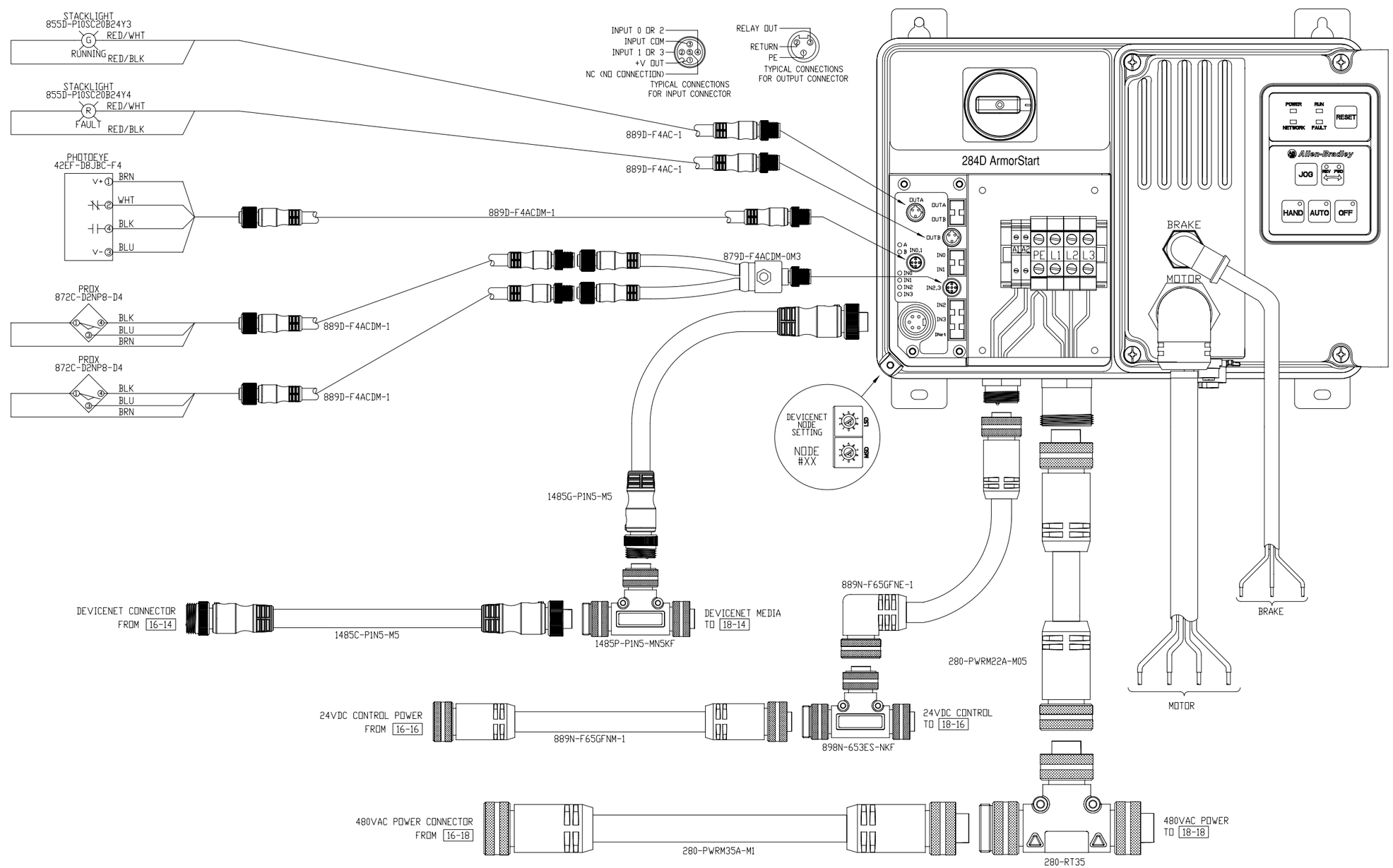

XXXX XXXXXXX XX XXX XXXXXXXXX XX XXXXXXXX XXXXXXXXXX XX XXX XXXXXXXXXXX XXXXXXXX XXXXX XX XXXXXXXXXXX XXX XXX XXXXXX XXXXXX XX XXXXXXXXXX	**XXXXXX_XXXX XXXXXX**	ARMORSTART (ON MACHINE) ACCELERATOR TOOLKIT 284D CONNECTIONS (UNIT4)	DWN -- DATE 06-11-09	
			DWG NO EXAMPLE	DWG REV A
		CUST COMPANY NAME	SHEET 17 OF 19	

CAD PART 17_OMAT_ARMORSTART_UNIT4.DWG

CONNECTION DIAGRAM

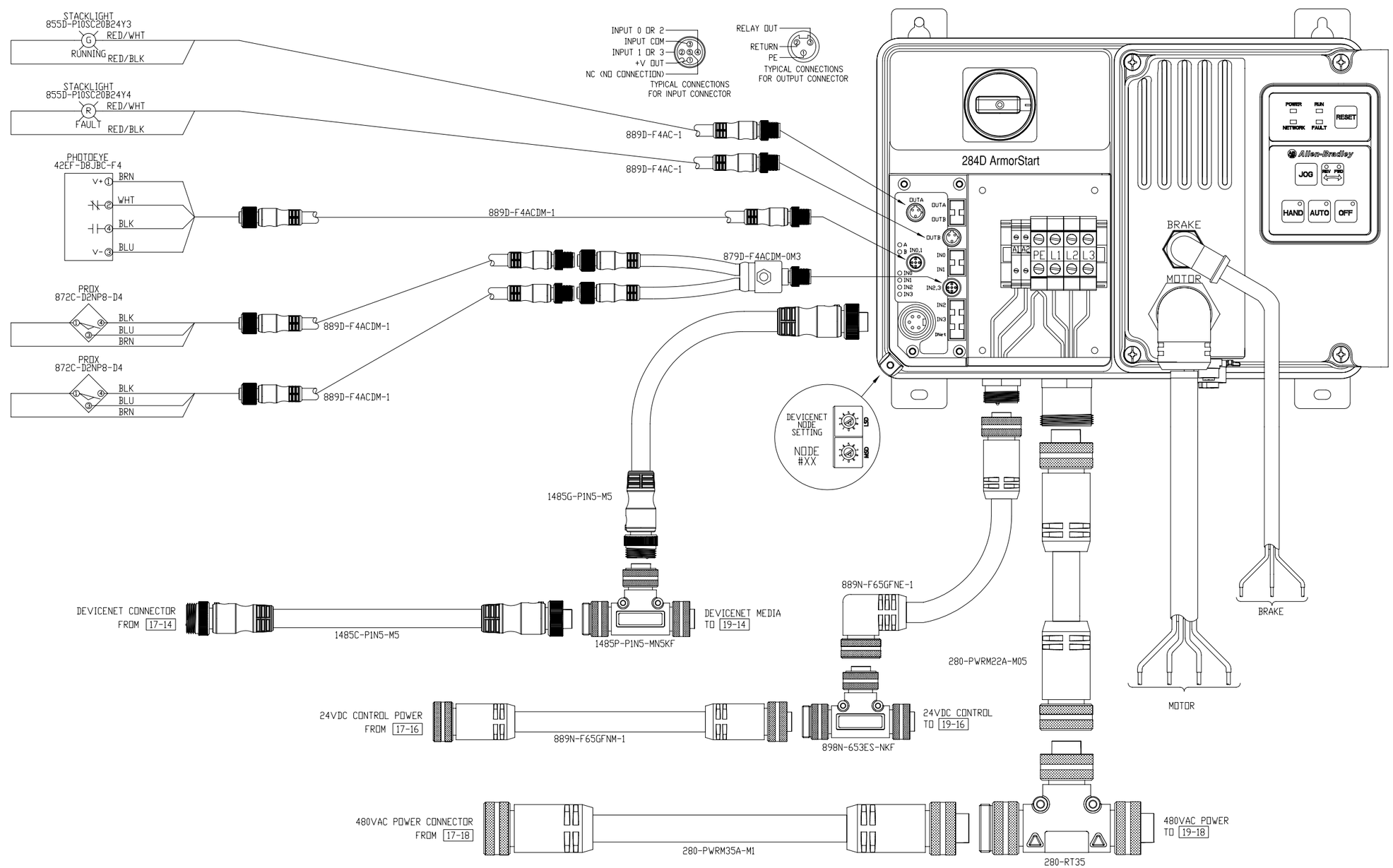

XXXX XXXXXXX XX XXX XXXXXXXXX XX XXXXXXXX XXXXXXXXXX XX XXX XXXXXXXXXXX XXXXXXXXX XXXXX XX XXXXXXXXXXX XXX XXX XXXXXX XXXXXX XX XXXXXXXXXX	**XXXXXX_XXXX XXXXXX**	ARMORSTART (ON MACHINE) ACCELERATOR TOOLKIT 284D CONNECITONS (UNIT5)	DWN -- DATE 06-11-09	
			DWG NO EXAMPLE	DWG REV A
		CUST COMPANY NAME	SHEET 18 OF 19	

CAD PART 18_DMAT_ARMORSTART_UNIT5.DWG

CONNECTION DIAGRAM

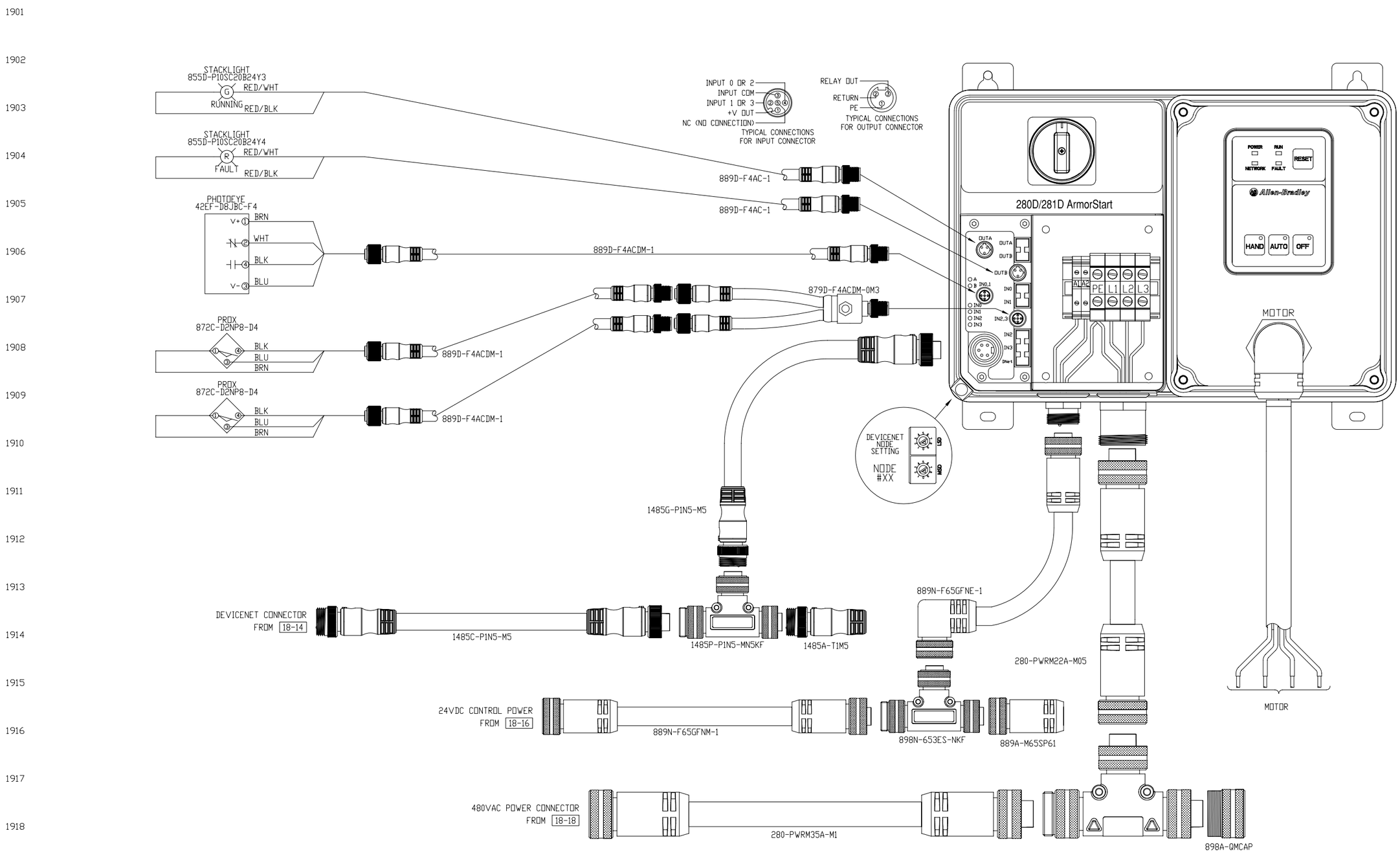

XXXX XXXXXXX XX XXX XXXXXXXXX XX XXXXXXXX XXXXXXXXXX XX XXX XXXXXXXXXXX XXXXXXXXX XXXXX XX XXXXXXXXXXX XXX XXX XXXXXX XXXXXX XX XXXXXXXXXX	**XXXXXX_XXXX XXXXXX**	ARMORSTART (ON MACHINE) ACCELERATOR TOOLKIT 280D CONNECTIONS (UNIT6)	DWN -- DATE 06-11-09	
			DWG NO EXAMPLE	DWG REV A
		CUST COMPANY NAME	SHEET 19 OF 19	

CAD PART 19_DMAT_ARMORSTART_UNIT6.DWG